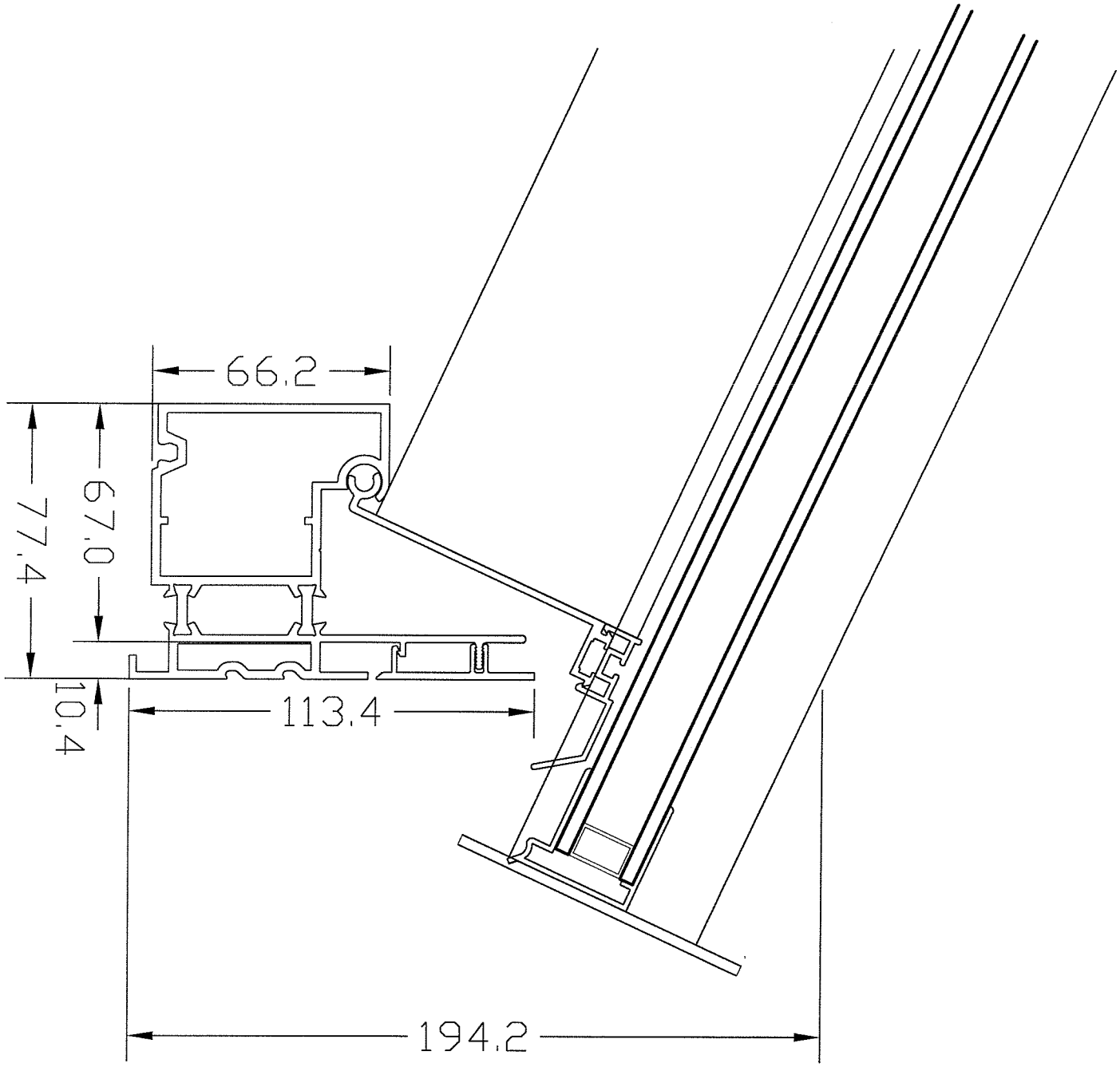
66.2
77.4
67.0
10.4
113.4
194.2